AS 100

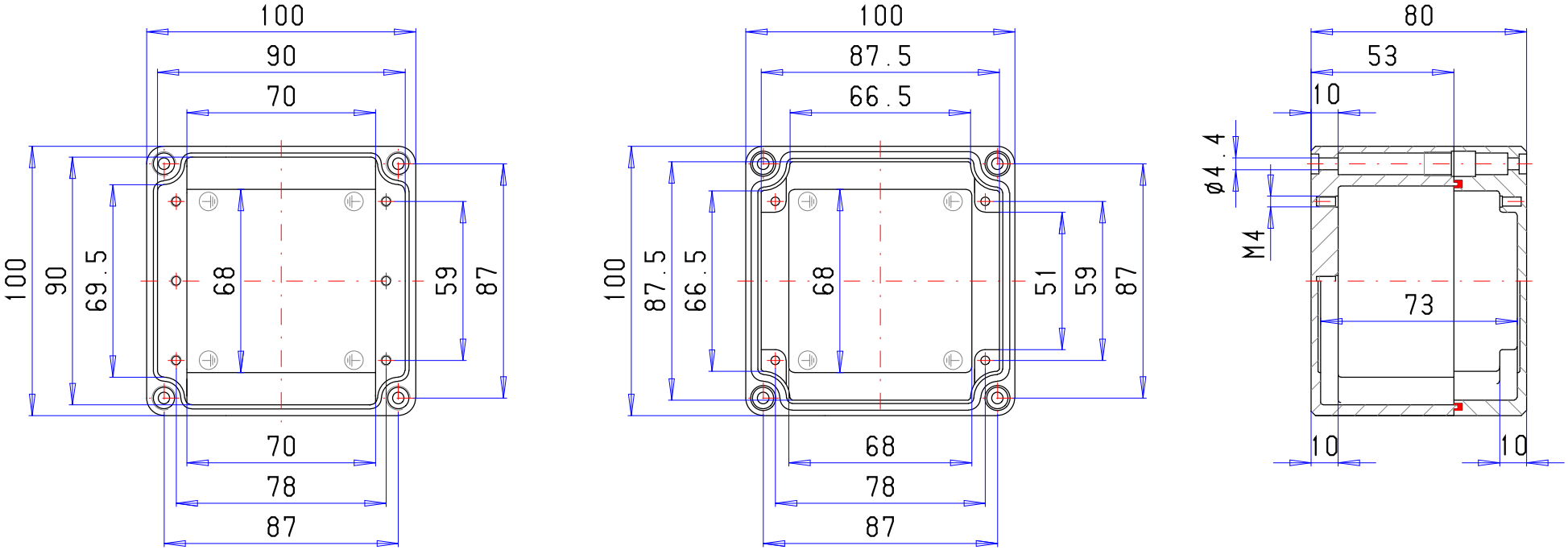
100
90
70
100
90
69.5
68
59
87
70
78
87
100
87.5
66.5
100
87.5
66.5
68
51
59
87
68
78
87
80
53
10
ø4.4
M4
73
10
10