HC 080

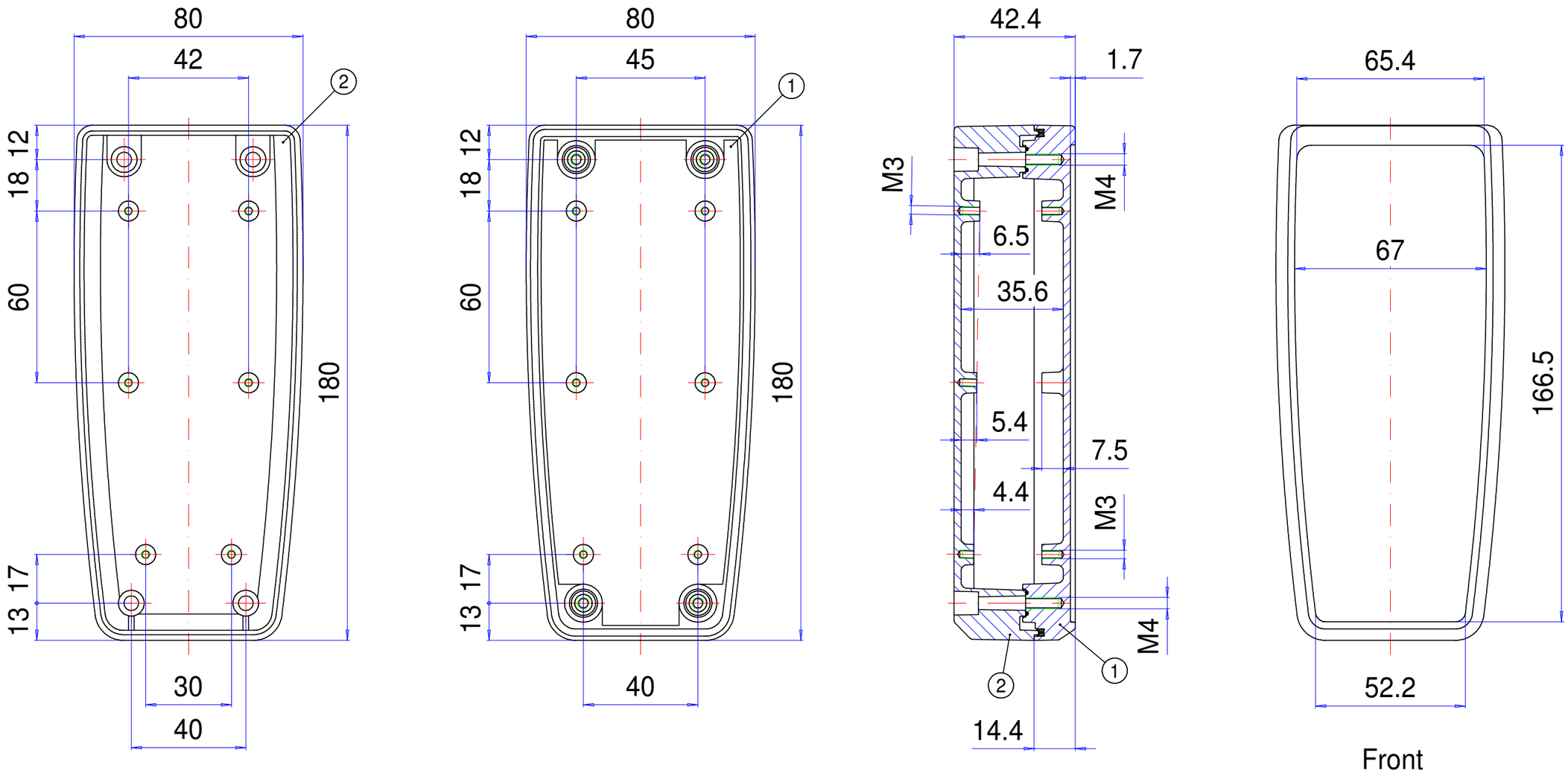
80
42
2
18 12
60
180
13 17
30
40
80
45
1
18 12
60
180
13 17
40
42.4
1.7
M3
M4
6.5
35.6
5.4
7.5
4.4
M3
M4
2
1
14.4
65.4
67
166.5
52.2
Front