MCH 100

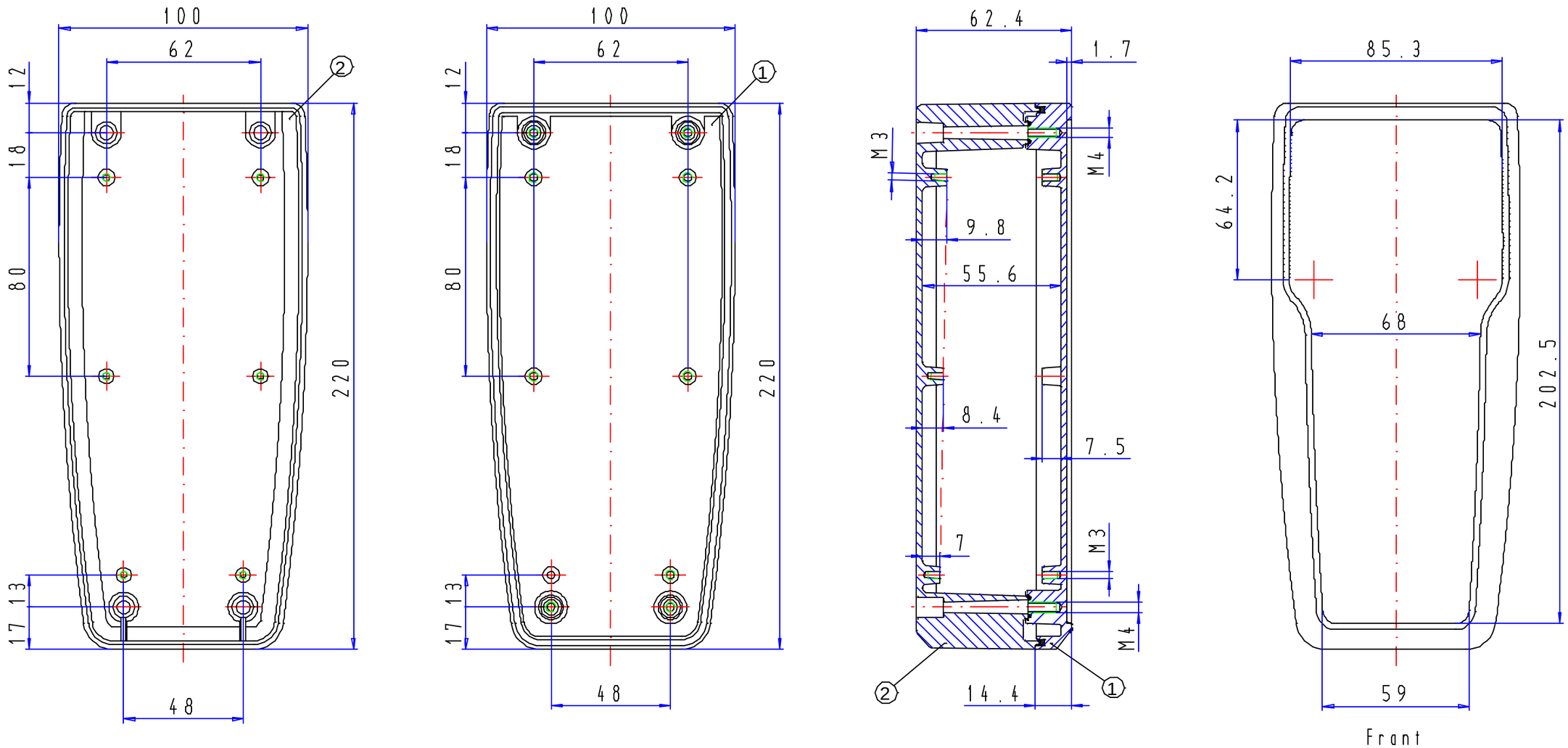
100
62
12
18
80
220
13
17
48
2
100
62
12
18
80
220
13
17
48
1
62.4
1.7
M3
M4
9.8
55.6
8.4
7.5
7
M3
M4
2
14.4
1
85.3
64.2
68
202.5
59
Front