HC 080

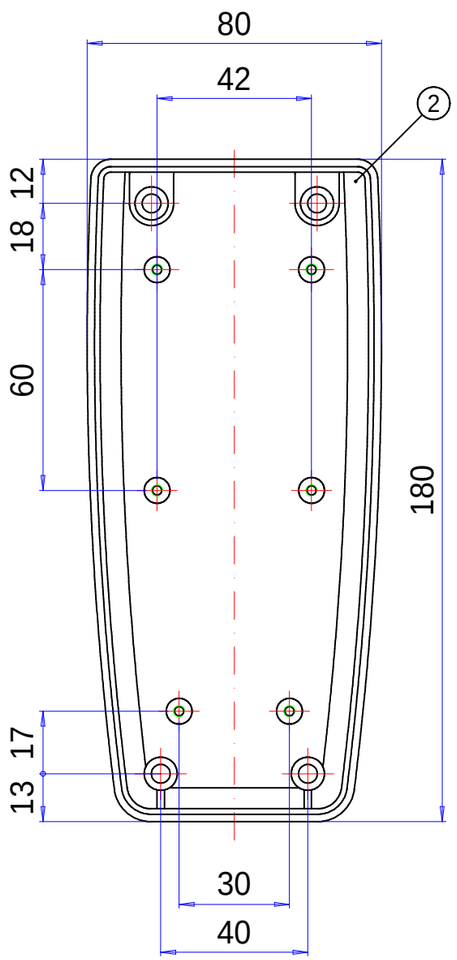
80
42
2
12
18
60
180
17
13
30
40

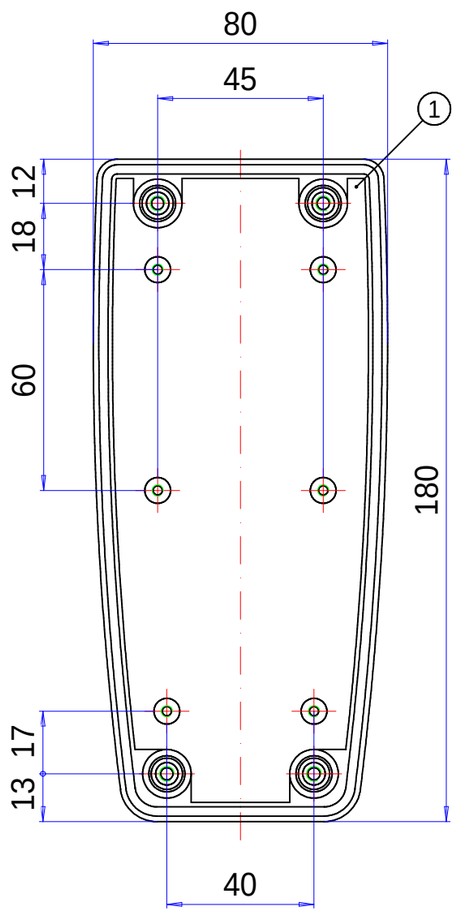
80
45
1
12
18
60
180
17
13
40

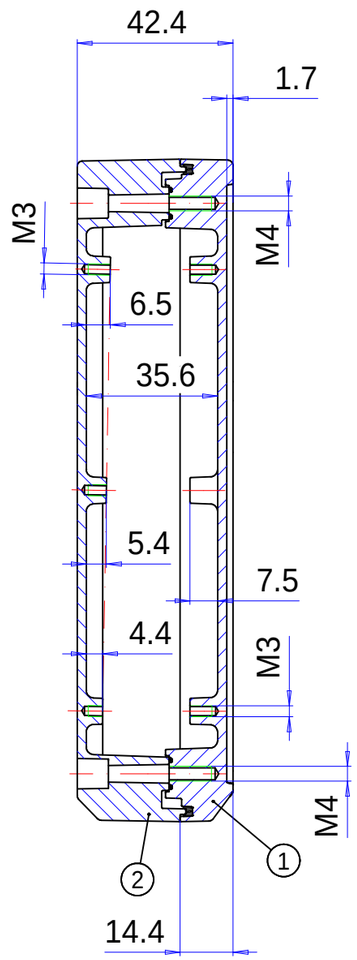
42.4
1.7
M3
M4
6.5
35.6
5.4
7.5
4.4
M3
M4
2
1
14.4

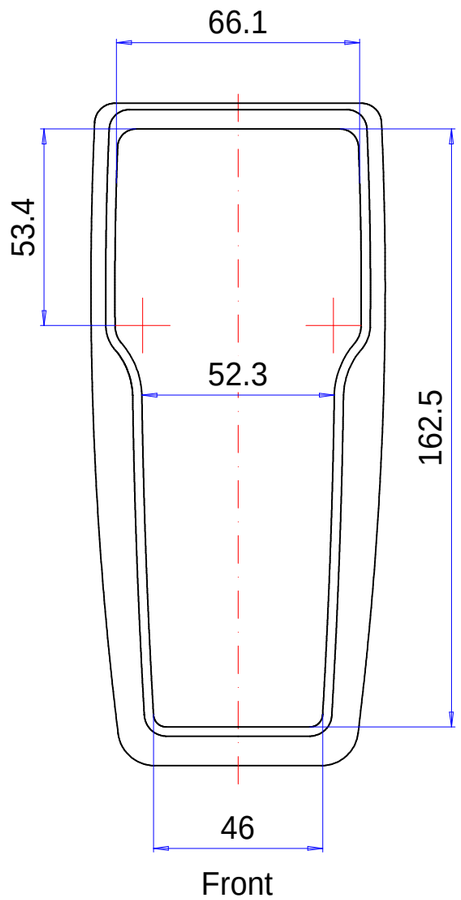
66.1
53.4
52.3
162.5
46
Front