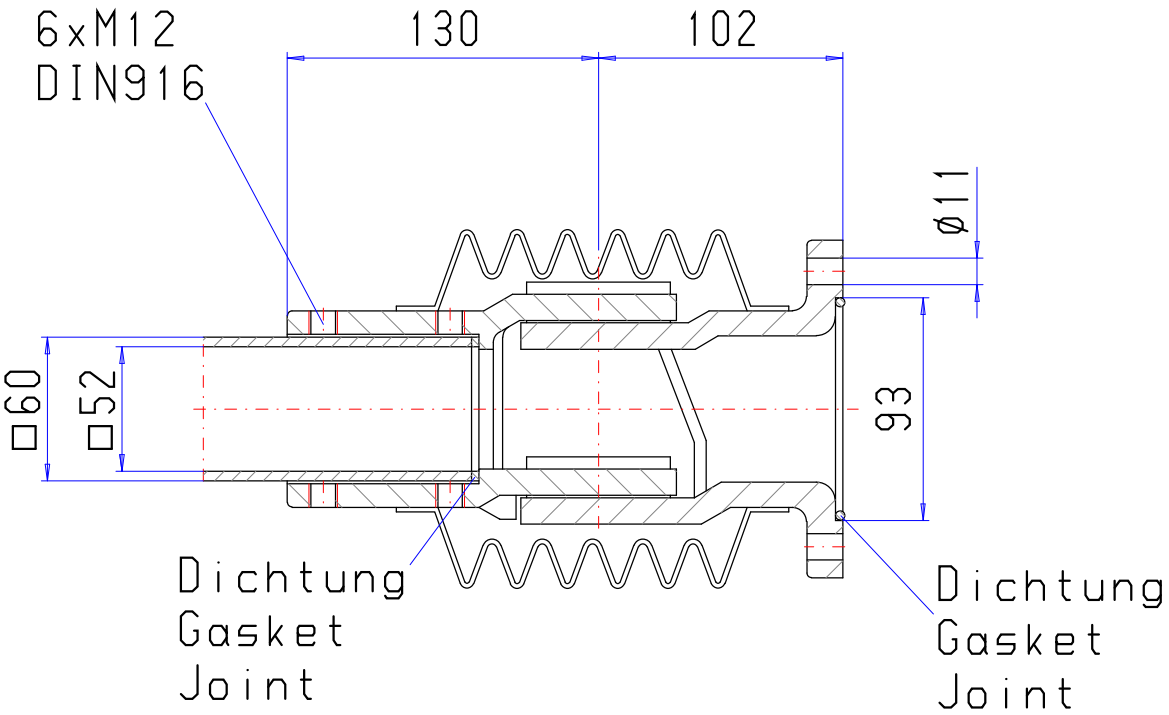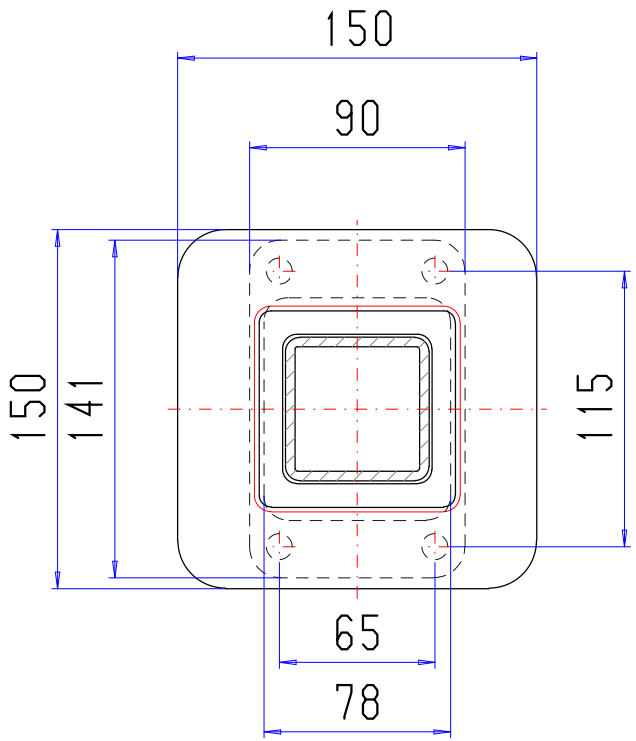Wandgelenk
Quadro 60