Enclosure series technoCASE

Type: TA 082

Material-No.: 201.082.000

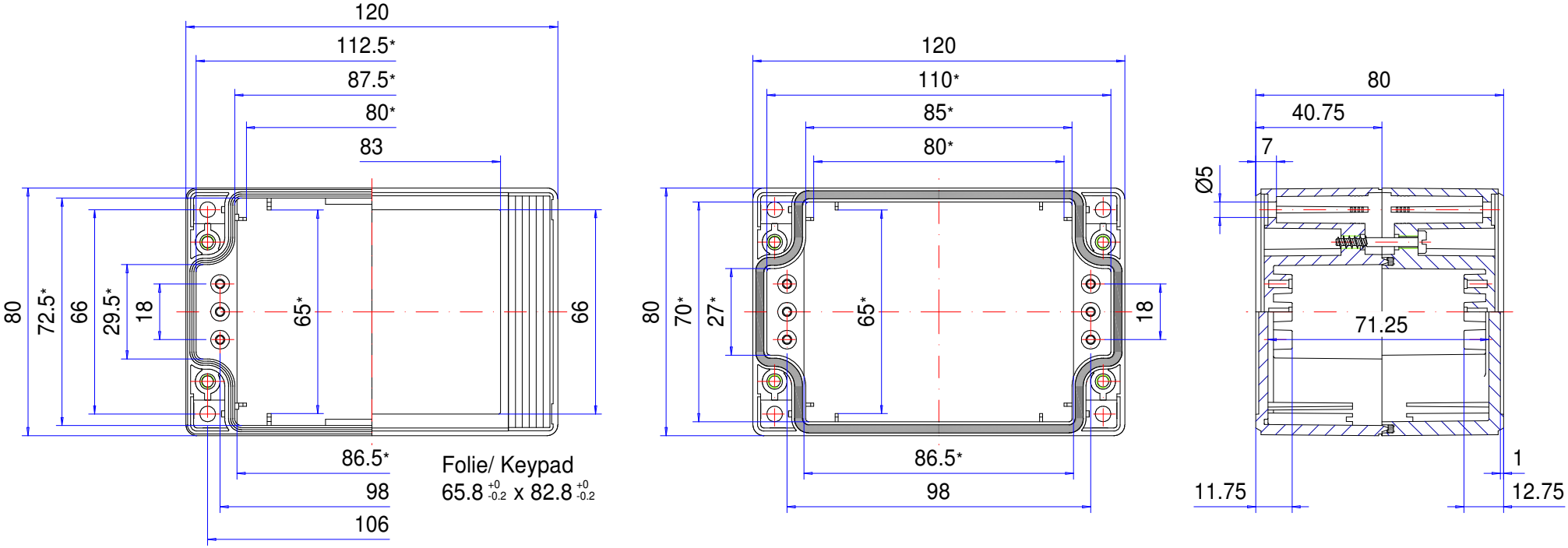

* Please note: Mould slope for casting ejection, dimensions in the amount of the bottom!

Enclosure material	ABS, UL 94 HB, RAL 7035, light grey		Weight	240 g
Lid screws	4x stainless steel 1.4567 (V2A), captive		Assembly screws	4x KBL Ø3x8,5, galvanized steel
Gasket	1x moulded gasket, silicone, black		Surface	Mirror finished
Ingress protection	IP66 EN 60529		Tolerance	DIN ISO 16901 T-130 (outside dimensions ±0,5mm)

201.082.000
technoCASE TA 082

Product overview

Material	ABS
Protection Class	IP 66/EN 60529
Color	RAL 7035
Length (L)	120 mm
Width (W)	80 mm
Height (H)	80 mm
Weight (g)	240 g

technoCASE

THE MULTIVARIABLE, THERMOPLASTIC ENCLOSURE

IP 66 - Optional: IP 67

The key product features:
• Enclosure material: ABS
• Enclosure surface: similar to RAL 7035
• Lid screws stainless steel 1.4567
• Integrated recess in cover for membrane keypad or front plate
• Fire protection class UL-94 HB
• Enclosure seal: Silicone moulded gasket

---

technoCASE is a modern range of plastic enclosures for industrial electronics and electrical equipment. The enclosures feature snap-on design strips which hide the lid screws and mounting channels, and give the enclosures their own individual appearance.

The design strips are available in light grey (standard), red, green, blue or yellow for individual colour coding or to match company colours. Both the lid and base have a recess for mounting a membrane keypad, face plate or product label. A large range of standard sizes is available. There is also an option to combine various lids and bottoms with each other, increasing the variety. Threaded screw bosses in the lid and base can be used for fitting circuit boards, mounting plates etc. Compatible cable glands, terminal rails and other accessories are also available.

We can supply technoCASE enclosures fully customised to your requirements.

Enclosure sizes

25

Further information

Integrated recess for membrane keypads or front plates

Functional and extensive range of accessories

Lid and bottom can be replaced if needed

Enclosure can be supplied as a flush-mounting, surface-mounting or top hat rail mounting model

Transparent lid available on request

Full protective insulation in accordance with VDE 0100

Enclosure

ABS halogen-free, similar to RAL 7035 light grey

1° mould slope for casting ejection

Special materials and colours on request

Flammability

UL 94 HB

Fastening
Separate screw channels outside of the enclosure interior.

Internal mounting
Fastening option for self-grooving screws on the base of the enclosure and in the lid

Ingress protection
IP 66 / EN 60529
Optional: IP 67 / EN 60529

Gasket
Silicone gasket

Lid screws
Stainless steel 1.4567, captive

Customising
Learn more about our full customising service for installation-ready enclosures

Full-Service-Products

Customization according to your wishes.

ROLEC®

Our passion is enclosures.

Expert advice

Everything begins with individual advice. We'll be pleased to support you with your project and find solutions for every requirement. Customer-specific solutions are our speciality.

Sample service

Test our products with your internal mounting. We'll be pleased to send you a sample enclosure for inspection with no strings attached.

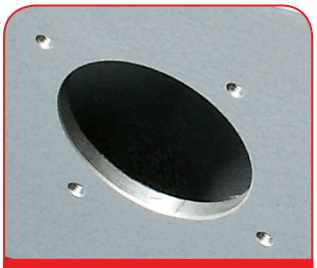

Drilling

We'll manufacture every enclosure for you according to your exact specifications – whether they involve precise drilling or large tolerance.

Mil ling

Thanks to our modern CNC production, we can quickly and efficiently mill custom-fit cut-outs and contours to match your exact specifications.

Engraving

Our services also include engraving your logo and other elements, which we can of course perform in any colour you desire.

Lasering

We can process stainless steel enclosures and plates quickly and reliably according to your individual requirements thanks to our in-house lasering centre.

Powder coating

We can powder coat enclosures, command enclosures and suspension systems in any RAL colour you desire. Custom colours are of course also possible.

Painting

We can also paint all our enclosures in any RAL colour you desire. The application of primer and special colour structures are possible, as well.

Serigraphy

If desired, we can apply your logo and lettering or other markings using serigraph printing.

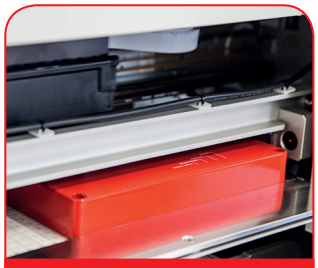

Digital printing

Digital printing is pa rticularly worthwhile for low-volume order s and for realising complex pa tterns or images.

EMC enclosures

We offer our conFORM low-price standard EMC enclosure to protect your internal mounting against electromagnetic radiation. On request, we can also supply an EMC-compliant version of any other ROLEC enclosure.

Displays

We are able to offer the right made-to-measure display for all our enclosures – in varying sizes and degrees of robustness depending on the application.

Accessories

ROLEC's portfolio also includes matching front plates, mounting plate, supporting rails and terminal blocks as well as a range of cable glands, blanking plugs etc.

Assembly

Would you like to have all your components supplied already assembled? No problem. Our assembly team will be pleased to perform all assembly work on your behalf.

If you have any requirements for services not listed here, please ask us. Customer-specific solutions are our speciality. We also are keen to take on unusual tasks.

We will help you with those challenges that many others would give up on.

Our Service