Enclosure series technoCASE

Type: TAH 202

Material-No.: 202.202.000

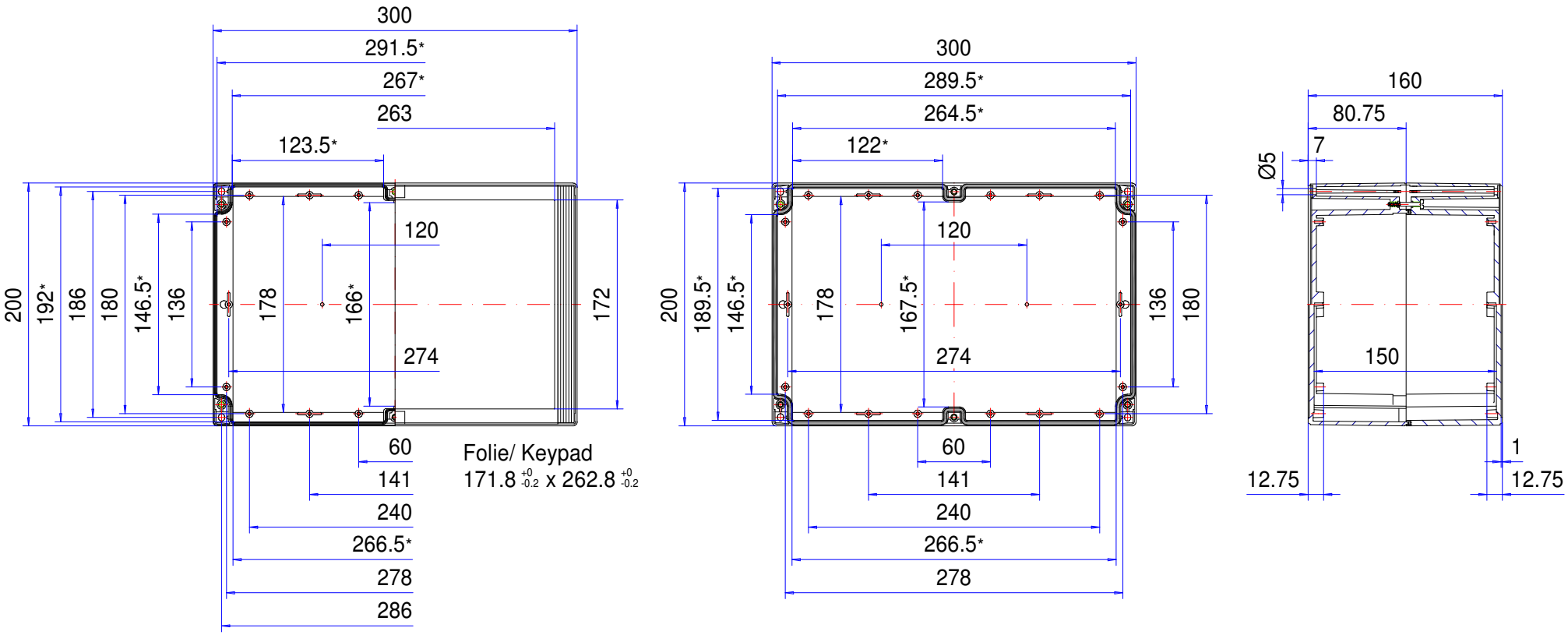

* Please note: Mould slope for casting ejection, dimensions in the amount of the bottom!

Enclosure material	ABS, UL 94 HB, RAL 7035, light grey		Weight	1.290 g
Lid screws	6x stainless steel 1.4567 (V2A), captive		Assembly screws	8x KBL Ø3x8,5, galvanized steel
Gasket	1x moulded gasket, silicone, black		Surface	Mirror finished
Ingress protection	IP66 EN 60529		Tolerance	DIN ISO 16901 T-130 (outside dimensions ±0,5mm)